HASWING®

船用推进器

用户手册

OWNER'S MANUAL

When the defection happen, please contact the local distributor, you can visit our website to get the distributor list http://www.haswing.com

50744 PROTRUAR 1.0
50745 PROTRUAR 2.0

致用户
To The Owner

感谢您选购“汉飞”所生产的电动船用推进器。其具有低噪音、无污染、操作性强、方便携带等优点，充分满足广大船舶爱好者的需求。我们衷心希望您能尽情体验水上娱乐的美好时光。

Thank you for choosing a Haswing electric trolling motor. It's designed for the purpose of superior performance, unpolluted and portable use. Enjoy your wonderful moment with Haswing trolling motor.

本用户手册包含正确安装，操作，保养等重要说明。为让推进器操作顺畅，建议用户在使用前应彻底理解手册上的内容及重要事项。如对手册上的操作或维护事项起疑问，请咨询汉飞客服中心。

This owner's manual contains information for proper installation, operation and maintenance. Be sure to thoroughly read and understand the contents before use. If you have any question about the operation or maintenance of your trolling motor, please contact Haswing customer service.

★ 为提高产品质量，我们欢迎广大用户给予评价及改进建议。
We welcome any comments on our product improvement.

为确保操作顺畅，防止意外发生，在用户手册及产品上注有特别符号信息。符号类别如下：

To avoid hazards and obtain great performance, special signs are noted in the owner's manual and on the product.

警告 WARNING — 表示如不遵守指示可能导致操作人员及他人严重受伤或死亡。
Failure to follow the instruction could cause severe injury or death.

注意 CAUTION — 表示必须采取特殊措施以免推进器损坏。
Special precautions that must be taken to avoid damage to the motor.

注 NOTE — 表示使程序更容易，更快捷地完成。
Information that makes the procedures easier and faster.

目录
Contents

主要部件说明： 01
Product's features

操作注意事项： 02
Before the operation

安装：
Installation

❶ 螺旋桨安装..... 03
Installing the propeller

❷ 船舶安装..... 04
Mounting the trolling motor

❸ 电源安装及电量指示 04-05
Battery connection and power reader

操作方式： 05-07
How to operate the motor

故障与修复： 08-09
Trouble shooting and solving method

维护与保养： 10
Maintenance

产品规格表 11
Specification

推进器电路图： 11
Electric circuit diagram

装箱清单 12
PACKING LIST

主要部件说明：
Product's features

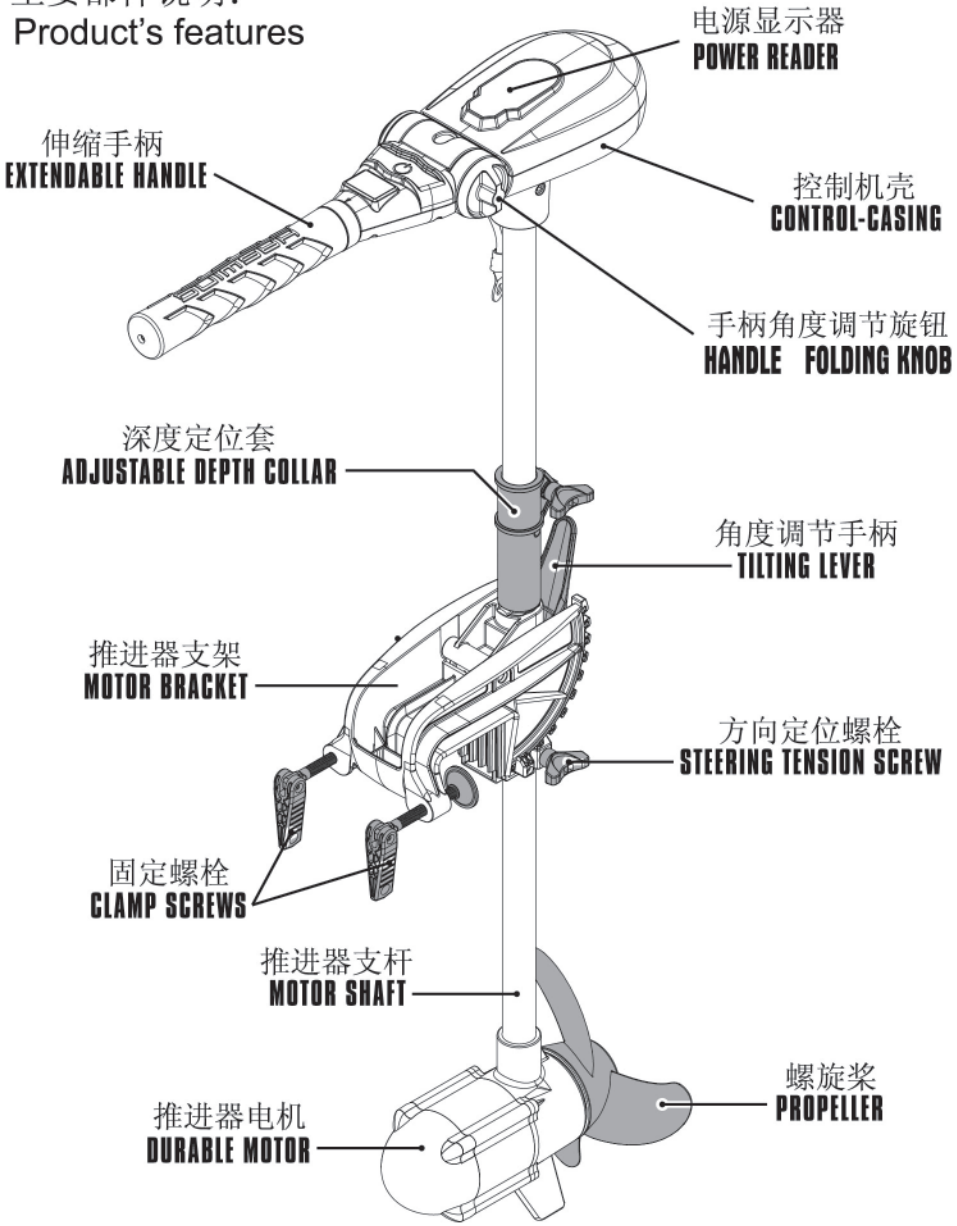

为提高该产品质量，我方保留对产品的更改权利。
We reserve the right to change parts without notice

操作注意事项：
Before the operation

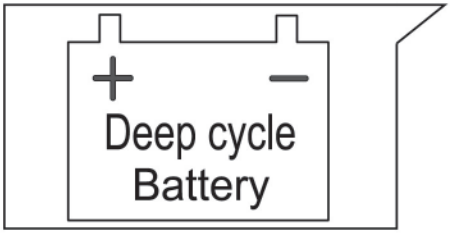

请使用深循环蓄电池。使用电压不符或不稳定的蓄电池可能会导致电机或电池的损坏。
Please use deep cycle battery for your motor. Improper use of battery would cause damage to the motor.

请勿在岸上接通电源或启动电机，以防意外发生。
Make sure the motor is off during the onshore period.

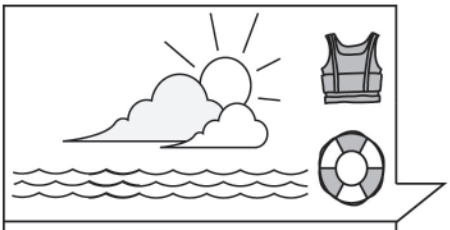

天气良好的时段活动
Weather condition

在接通电源前，请确认变速手柄上的档位为0档。
Please make sure the motor is off (handle on neutral), before connecting the battery.

用户应选择天气良好的时段活动，活动时应配备个人救生衣。
Personal life-jacket is needed at all time. And choose a good weather for your outdoor activity.

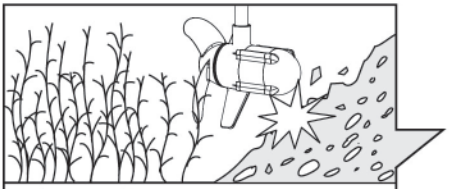

留意水下环境 Beware the underwater condition

当船只进入浅水区或靠岸时，请调节至0档减慢航速并调整推进器与水面的角度以免电机碰撞受损。
Turn the motor off (handle on neutral) to slow down the boat's speed. Tilting the motor to prevent impact when entering the shallow water area.

推进器运行时要留意游泳者以及周围环境。
Beware of the swimmer and your surrounding during the operation.

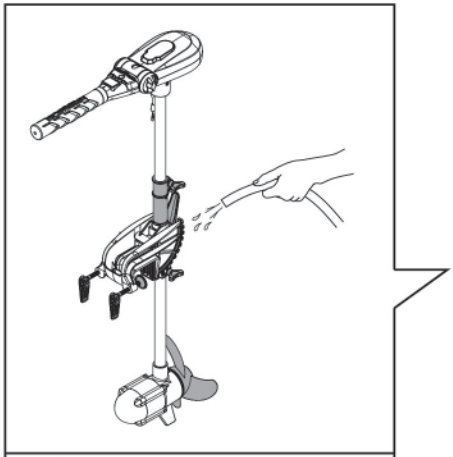

冲洗干净 Cleaning the motor

使用推进器后应清理螺旋桨上的杂物，用清水冲洗推进器。特别在海水使用后要彻底冲洗干净。
Remove sundries from the propeller and wash off the motor, especially after the saltwater use.

注意
CAUTION

推进器整机防水性能：IP67,电机部分：IP68.
IP67 waterproof level for general.
IP68 waterproof level for the motor.

❶ 螺旋桨安装
Installing the propeller

警告 WARNING 在安装更换及保养螺旋桨前必须断开电源。

Make sure the motor is disconnected from the battery before installing or replacing the prop.

注 NOTE 请使用我司提供的专用工具或配备一把7mm扳手作安装用途。（切勿使用其它不恰当的工具以免损坏配件）

Use the propeller wrench supplied or 7mm wrench for the installation. (The use of inappropriate tools may cause motor damage)

1. 首先将螺旋桨固定销以水平方向穿进电机轴销孔上，再把螺旋桨装入电机轴上（螺旋桨背面的销槽必须与固定销对正装合）。最后把阴阳极、不锈钢垫片和螺母套入电机轴上。(如图. 1)

Install the drive pin into the shaft hole and align it with the propeller (The drive pin and the propeller groove must align horizontally). Once the propeller is in place install the Sacrificial Anode, stainless washer and nut into the shaft. (figure.1)

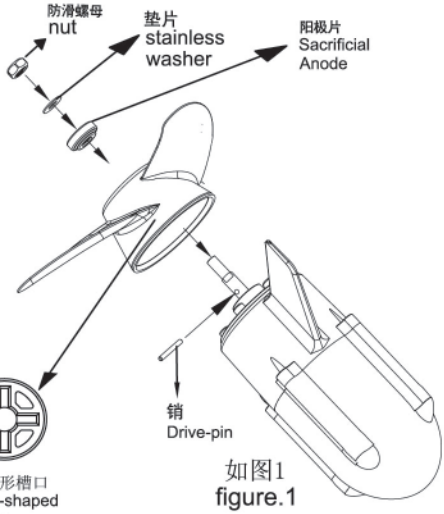

如图1
figure.1

注 NOTE 螺旋桨背面共有两个固定槽口，如损坏其一，用户可卸下螺旋桨更换至另一个。

The cross-shaped groove (2 grooves) allow user to reassemble the propeller if one groove is worn off.

2. 用手握住螺旋桨叶的一端以防转动，然后用专用扳手使螺母固定螺旋桨。(如图. 2)

Hold the propeller to prevent it from revolving and use the propeller wrench to tighten the propeller nut. (figure.2)

如图2
figure2

注 NOTE 如要卸下或更换螺旋桨及其它配件，请按以上方法反步骤进行。

If replace or detach the propeller. Please follow the above instruction steps and procedure it conversely.

❷ 船舶安装
Mounting the trolling motor

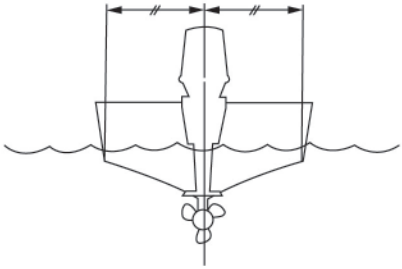

警告 WARNING 请勿在安装及卸载推进器时接通电源或启动电机，以防意外发生。
Make sure the motor is battery disconnected during the mounting and dismounting or onshore period.

请将推进器安装在船尾板的中段位置，再拧紧推进器支架上的两个螺栓。（如图.3）

Mounting the trolling motor on the centerline of the boat, tighten the clamp screws. (figure.3)

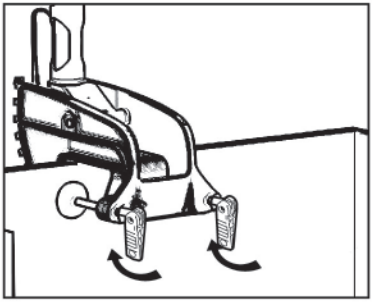

如图3
figure.3

❸ 电源安装及电量指示：
Battery connection and power reader

警告 WARNING

在接通电源前，务必确保变速手柄上的档位为0档。
Make sure the motor is off (handle on neutral), while connecting the battery.

1. 电源安装
Battery connection

选择合适电源 — 请使用深循环蓄电池。使用电压不符或不稳定蓄电池都可能导致电机或电池的损坏。

Select a compatible battery --- Please use deep cycle battery for your motor. Improper use of battery would cause damage to the motor.

连接电源—请将红色（+）正极电源线末端连接至电池的正极处（+），黑色（-）负极电源线末端连接至负极处（-）并固定。（如图.4）

Connecting the battery - connect the red motor cable (+) to the positive battery terminal (+), black cable (-) to the negative terminal and fasten it. (figure.4)

把电池放置在通风干爽的位置。

Put the battery in a ventilated place.

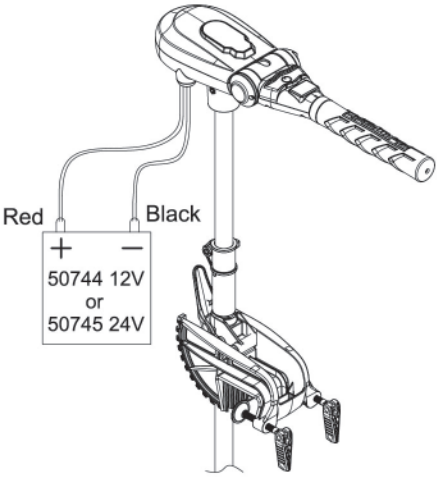

如图4
figure.4

2. 电量指示
Power reader

推进器上设有一个实时检测电源电量的指示区。电量充足时所有指示灯亮着。当电量降低时，指示灯组的灯会从上往下熄灭。当指示灯剩下20%的红灯时，建议给蓄电池充电。(如图.5)

The motor has a power reader to display a real time battery level. Full light indicates a full power charge condition. The light will go off when the power is continue to decline. Please recharge the battery when it reduces to 20%. (figure.5)

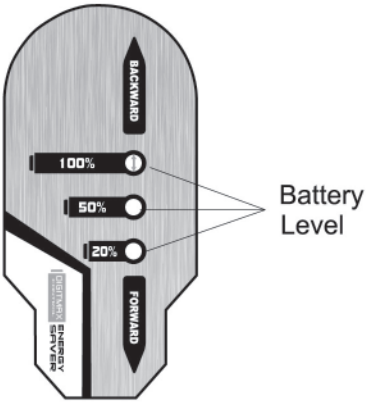

如图5
figure.5

操作方式：
How to operate the motor

1. 调节推进器与水面的角度
Tilting the motor

用手扳动角度调节柄，另一只手握住推进器的支杆往后拉动，将推进电机的角度调至合适的位置（推进器支架上共有10个位置定位），然后放松手柄固定推进器的角度。（如图.6）

Hold the motor shaft with one hand and depress the tilting lever with other hand. Adjust the motor to a desired angle then release the tilting lever to lock it. (The motor has a 10 tilting levels) (figure.6)

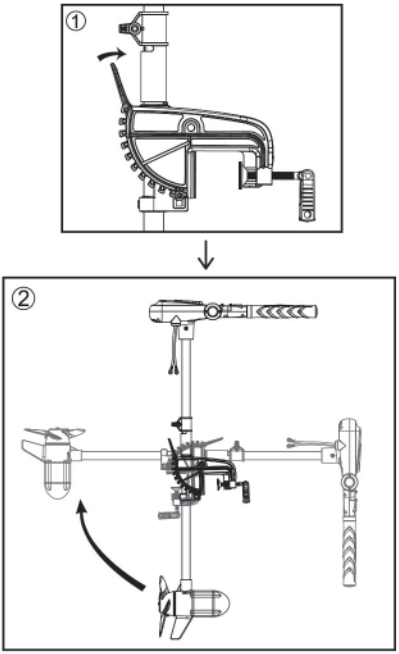

如图6
figure.6

2. 手柄的角度及长度调节
Trolling motor handle

手柄上设有角度调节与可伸缩功能。用户可按照个人的操作习惯更改手柄的角度和长度（调节角度范围为180度，延伸总长为400㎜）以便船上作业。用户还可使用手柄角度调节旋钮来调节其收放的顺畅性。（如图.7）

This trolling handle has folding telescoping function. Adjust the desired control position simply by pulling and pushing the handle(folding angle:180°extended length:400mm).User can also adjust the folding knob to stabilize the angle position.(Figure.7)

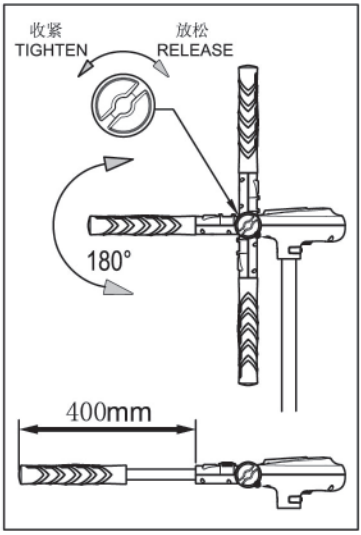

如图7
(Figure.7)

3. 控制推进器的速度
Speed control

推进器速度控制为“无级调速”。手柄上印有“0”位标记和正反调节刻度线，当箭头对齐“0”位时机器处于静止状态。手柄由0位顺时针转动为前进，调节角度180°；手柄由0位逆时针转动为后退，调节角度90°；推进器随手柄调节角度的不同，行驶速度做相应变化。(如图.8)

This motor has stepless speed. There are "0" position mark, Forward mark and Reverse mark on the handle. Motor does not work when arrow aim to "0" position. Turn the handle clockwise from "0" position, motor will go forward, turning range is 180 degree. Turn the handle counterclockwise from "0" position, motor will go backward, turning range is 90 degree. Motor speed changes accordingly when you turn the handle to different angles. (figure.8)

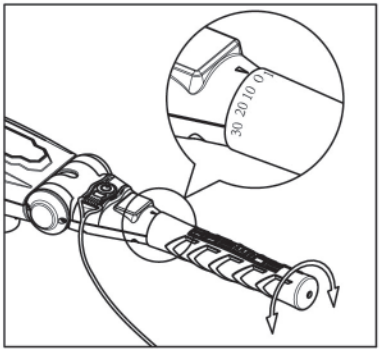

如图8
figure.8

4．如何固定船只的行驶方向
Tension the steering

松开方向定位螺栓，将手柄推向合适的方向，然后再拧紧螺栓固定船只行驶方向。（如图.9）

Loosen the steering tension screw, set the motor to a desired direction and fasten it again. (figure.9)

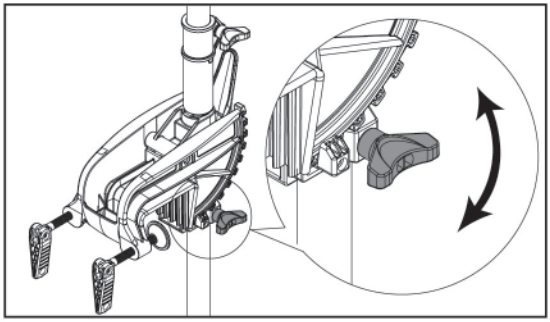

如图9
figure.9

5．调节推进器的吃水深度
Adjust the motor depth

松开深度定位套上的螺栓。将定位套调节至合适 的位置再拧紧螺栓固定。用手握住推进器支杆，然后松开方向定位螺栓调节吃水深度。（如图.10）

Steady the motor shaft and set the depth collar to a desired position then secure it. Loosen the steering tension screw and deploy the motor carefully. (figure.10)

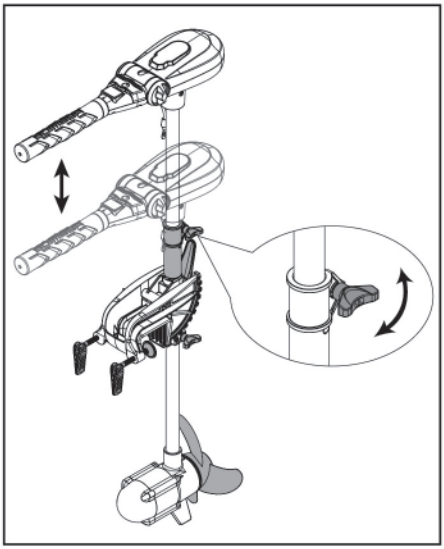

如图10
figure.10

故障与修复：

Trouble shooting and solving method

1.电机运行艰难或停止运作 Motor fails to run or lack of power

查看电源是否按正确方式牢固连接。
Make sure the motor cable is connected properly.

如发现蓄电池与主电源线的接触点附着异物或生锈，应当给予清洁。
Check if the cable terminals clean and corrosion free.

查看蓄电池电量是否充足。如电量过低时请充电。
Make sure the battery is full . Please recharge it when the battery is empty.

检查螺旋桨是否被线或水草缠绕。如有异物阻塞螺旋桨内部，请卸下螺旋桨进行清洗。（“警告”清理螺旋桨时请先切断电源）
Make sure there is no fishing line or weeds caught up in the propeller. Please detach and clean up the propeller if there is sundries got caught inside the prop. (WARNING : Make sure the motor is disconnected from the battery)

2.推进器难以掌舵 Hard to steering

查看方向定位上的螺栓是否松开。
Check if the steering tension screw is loosened.

检查推进电机支杆上是否附有异物，清洁干净后在转向的位置及其连接关节上打上润滑剂。
Clean the motor shaft and apply lubricant to the fasteners and turning parts.

检查在水底使用过程中是否有障碍物妨碍推进电机或影响转向
Make sure the underwater condition is fine and nothing blocks the way.

3.推进器噪音大或晃动大 Motor vibration

检查螺旋桨是否安装牢固。
Make sure the propeller is installed properly.

查看螺旋桨及其固定销是否弯曲变形, 如损坏严重建议更换配件。
Inspect the propeller and the drive pin conditions, replace it if necessary.

断开电源，用手转动螺旋桨，如受到阻碍或卡住，表明电机内部可能受损。请停止使用并联系汉飞客服中心。
Disconnect the battery cable and examine it by turning the propeller manually, motor shall turn freely with a slight magnetic drag. Internal damage might occur if motor is blocked or locked. Stop use it and contact our customer service.

4. 操作故障指示
Operation error indication

本机还设有“操作故障检测功能”。如因使用不当导致故障时，推进器会自动停止运转，这时应对其功能进行以下事项进行检查:

The motor has an operation error indication function. Motor will automatically stop if operation errors occur, please inspect the following condition:

❶ 在电源接法正确的情况下，如果所有电源指示灯不亮且机器无任何动作。请检查电源是否正确连接好。如果指示灯只亮红灯且机器无任何动作，请检查电池的电压是否处于有电状态。

If the power indicator doesn't light and the motor doesn't work, please check if the power cable being well connected.If all the power rate indicators don't light or only the red one lights, and the motor doesn't work,please check the voltage of the battery.

❷ 此推进器还设有高压及低压保护，一旦发生保护，此推进器都不工作。

There is a voltage protect function in this motor, when it is happened,the motor will not work.

❸ 如果电压正常，请检查控制手柄箭头有没有在中央位置(0档),如果没有请把手柄转到中央位置并听到“滴”一声响后便可起动。

Make sure the control handle is on the neutral position.if not please turn it back to the neutral and then will heard "beep" indicate system ready.

❹ 如推进器在行使过程中，突然停止运作，但将控制手柄回中后过几秒钟又可以正常工作。表示螺旋桨受阻碍导致电流过高后机器启动了保护程序。请检查是否超载或被钓鱼线，水草缠绕。如有异物阻塞螺旋桨内部，请卸下螺旋桨进行清理。

The motor suddenly stops at it is current speed, turn the control handle to the neutral position then speed up the motor again.If the motor stop frequently. It means the propeller is blocked and lead to high current protection.Please check if the motor is overloaded or blocked by fishing line or weeds. If yes, please dismount the propeller and wash it.

5. 蜂鸣模式
Audio Pattern

蜂鸣模式对照表 AUDIO PATTERN TABLE

蜂鸣模式 AUDIO PATTERN	蜂鸣响声说明 CONDITION
短响3声 3 beep	机器进入正常工作状态 System ready
连续短响声 Continuous short beep	高压保护，低压保护，电机在通电时手柄不在0位 ● High-voltage protection ● low-voltage protection ● system ready but throttle is not on neutral position
连续快速短响声 Continuous “fast short” beep	机器进入大电流状态 Motor running on high (Amp) current condition
连续长响 Continuous long beep	机器进入保护停机状态，等待手柄恢复0位 Motor stop operation, wait the throttle back to neutral position.

★ 如有其它问题，请与汉飞客服中心联系。
For all other malfunctions not listed above, please contact Haswing customer service center.

维护与保养：
Maintenance

1.在推进器每次使用后应该按说明书要求冲洗保养，冲洗过后应保持整洁，因不当使用导致电机表面腐蚀或损坏属保修无效。（请参考P.2）
Please wash and clean the motor and propeller intensively after use as per manual, caused by improper use of surface corrosion or damage to the motor is not covered by the warranty. (Refer to P.2)

2.每次使用后，用水彻底冲洗，将附着螺旋桨的线，水草和阻塞于螺旋桨内部的杂物等清洁干净。（清洗部位请阅P.2“冲洗干净”）
Clean up all the sundries on or inside the propeller after every use. (Please see P.2 “cleaning the motor”)

3.用户应定期对各个活动关节部分给予润滑，使用专业工具（如：螺丝刀，扳手等）调紧松脱的部位。
Apply lubricant to the turning parts regularly and use proper tool to fasten the parts.

4.使用后应在电池与主电源线的连接处上给予防锈处理。
Apply rust prevention to the cable and battery terminals after every use.

5.请把推进器存放在干爽通风的环境下。
Store the motor in a good ventilated place and keep it dry.

6.请勿在环境复杂的水域里使用，以免损坏推进器。
To avoid hazards, do not use the motor in the intricate water.

7.请勿使推进器受重压或撞击。
Do not crash or put heavy things on top the motor.

8.本产品纯属户外娱乐设备,用户不得将其作为长时间长距离或超负荷营运使用。
This motor is designed for outdoor amusement only. Continuous long distance transport is not permitted.

产品规格表 Specification

型号 Model / 参数 Parameter	50744 Protruar 1.0	50745 Protruar 2.0
额定电压 Voltage -Rated/Max	12V	24V
额定功率 Input Power Watts	600W	960 W
峰值推力 Peak Thrust in Lbs	65LBS	85LBS
等效汽油舷外机推力 Comparable Gasoline Outboards(Thrust)	2HP	3HP
最大杆长 Max Shaft Length	90CM	90CM
操控模式 Control Type	无级变速 前进/后退 Stepless Speed F/R	无级变速 前进/后退 Stepless Speed F/R
转向模式 Driving Type	连续 360° 360° Lockable	连续 360° 360° Lockable
电机类型 Motor Type	无刷电机 Brushless Motor	无刷电机 Brushless Motor
产品净重 Product Net Weight	6.3 kg	6.7 KG
电池配置（推荐） Battery Type (Suggestion)	1X105AH 深循环蓄电池 1 X 105AH Deep Cycle Battery	2X105AH 深循环蓄电池 2 X105 AH Deep Cycle Battery
船长（推荐） Max Boat Length(Suggestion)	6 M	6.5 M

推进器电路图：
Electric circuit diagram

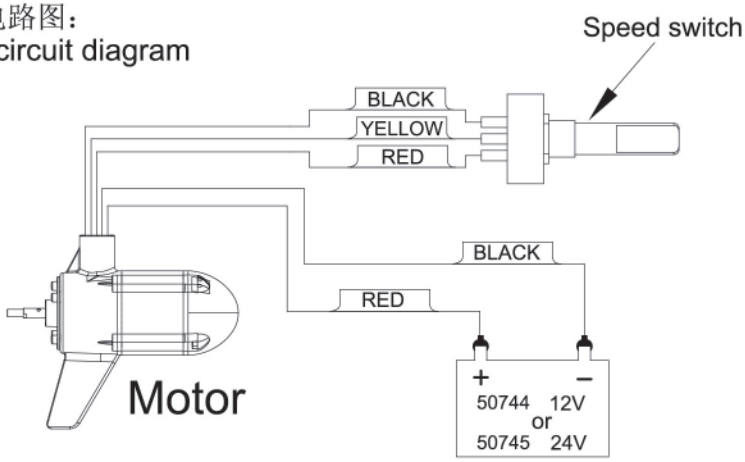

50744/50745 装箱清单 Packing List

主机	螺旋桨	50745 跳线
Trolling Motors	Propeller	50745 Wire jumper
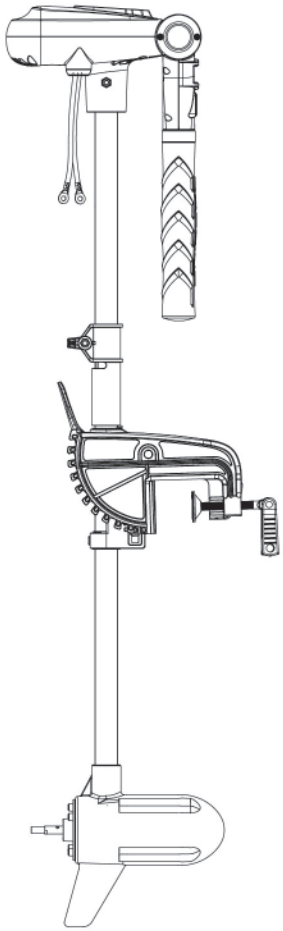	1PCS	1PCS

说明书	多用扳手（十字）
Owner's Manual	Propeller Wrench
1PCS	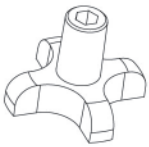 1PCS

销	阳极片
Drive Pin	Sacrificial Anode
2PCS	2PCS

防滑螺母	垫片
Nut	Stainless washer
2PCS	2PCS

中 山 市 雅 太 电 器 有 限 公 司
Yatai Electric Appliances Co.,Ltd.
地址：中国广东省中山市三乡镇南龙新龙街四号
Add:No.4 Xinlong St.Nanlong, Sanxiang,
zhongshan,guangdong Province,China.
邮编/Postcode:528463
电话/Tel:+86 760 86692666
传真/Fax:+86 760 86692996
WWW.HASWING.COM

Printed in China
适用于：50744/50745-V01
Suitable for: 50744/50745-V01